4" Centre Lavatory Set with Pop-Up 1BRBRJL

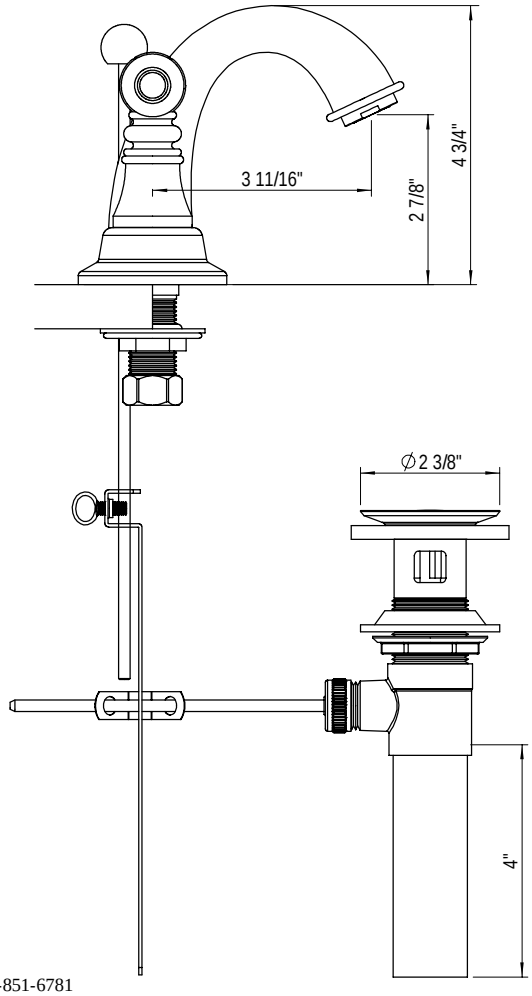

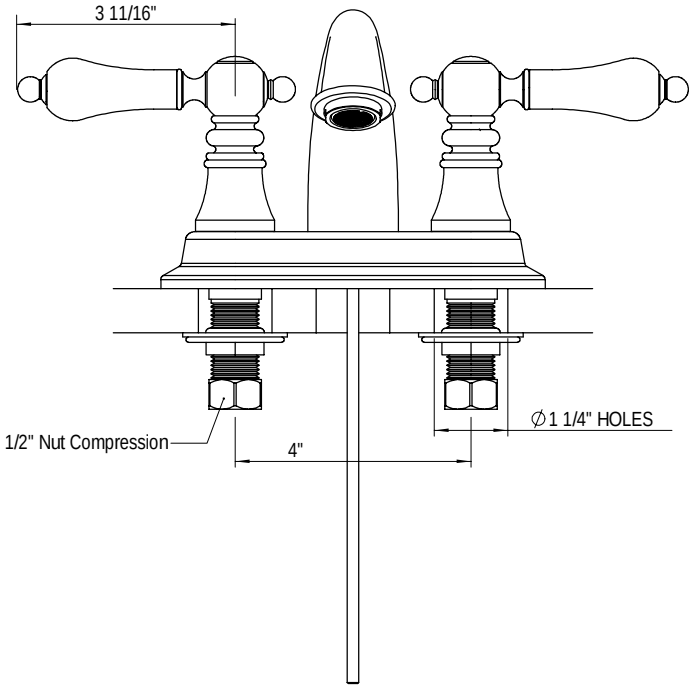

TEL: 905-851-6781
FAX: 905-851-8031
TOLL FREE: 800-461-5901

the RUBINET FAUCET COMPANY

www.rubinet.com